Rev. Date: V3 08/14/2023

CREE LIGHTING

EMERGENCY LED DRIVER

EB**W-UNV-KIT

HIGH VOLTAGE OUTPUT 170VDC

CONSTANT POWER EMERGENCY OUTPUT

Self Test

Model No	Input Voltage	Input Power	Input Current	Output Voltage	Output Power	Application	Ambient Temperature
EB15W-UNV-KIT	100-347Vac 50/60Hz	8W Max	≤100mA	170V DC	15W	For use with CDR Gen B Series only. Suitable for direct contact with insulation (IC rated).	0°C to +50°C (32°F to 122°F)
EB25W-UNV-KIT	100-347Vac 50/60Hz	8W Max	≤100mA	170V DC	25W	For use with CDR Gen B Series only. Suitable for direct contact with insulation (IC rated).	0°C to +50°C (32°F to 122°F)

Wiring Diagram

Wiring 1: For LED Driver with input power higher than emergency output power

0/1-10V Dimmable LED Driver + Dimmer + Wall Switch

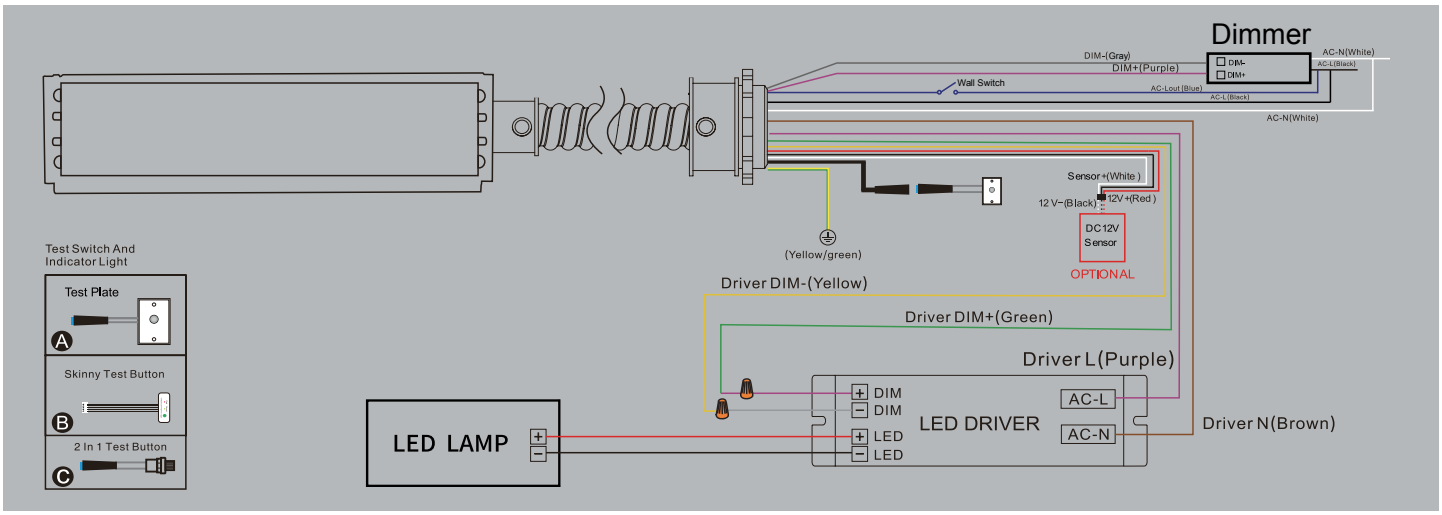

Wiring 2: For LED Driver with input power lower than emergency output power

0/1-10V Dimmable LED Driver + Dimmer + Wall Switch

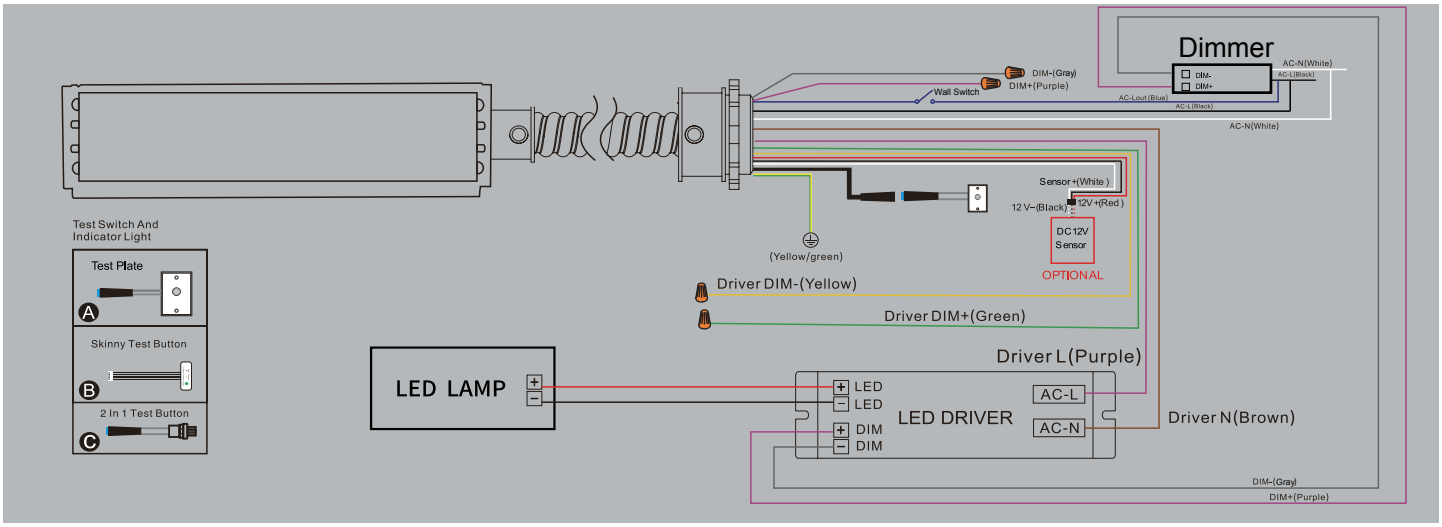

Wiring 3: For LED Driver with input power higher than emergency output power

0/1-10V Dimmable LED Driver + Wall Switch

Emergency Driver Dim+(Green), Driver Dim-(Yellow) Have to connect with LED driver DIM+ and DIM-

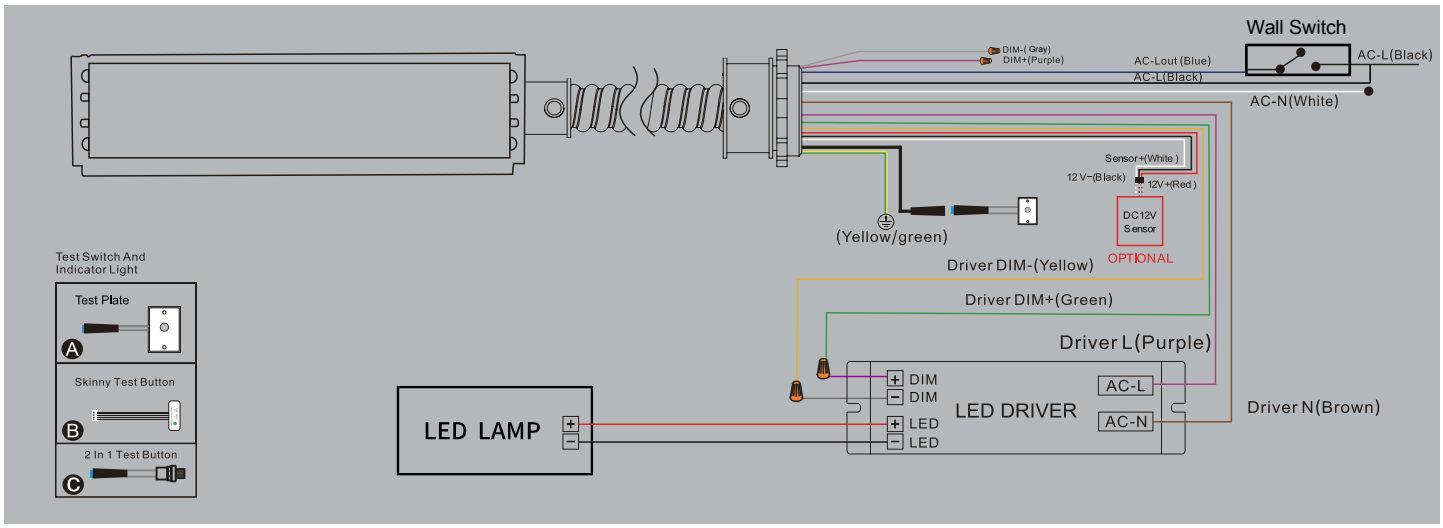

Wiring 4: For LED Driver with input power Lower than emergency output power

0/1-10V Dimmable LED Driver + Wall Switch

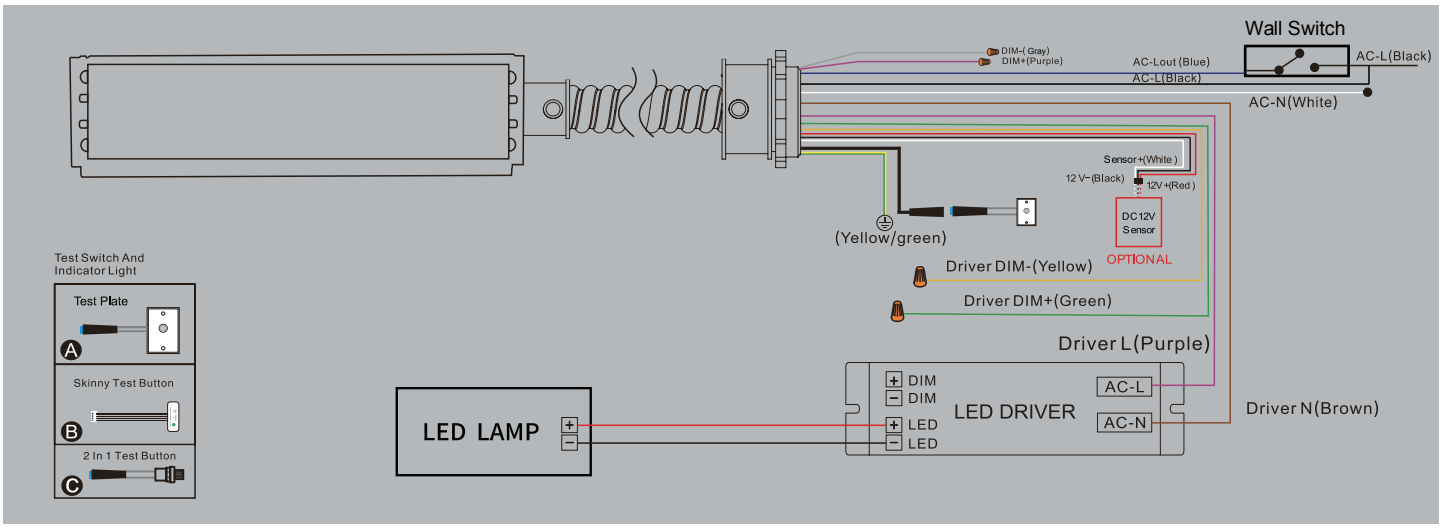

CAUTION: The Emergency LED driver must connect to 0/1-10V dimming wires (DIM+, DIM-) of the fixture if the LED luminaire power exceeds the emergency LED driver power.

IMPORTANT SAFEGUARDS

When using electrical equipment, basic safety precautions should always be followed including the following

PLEASE READ AND FOLLOW ALL SAFETY INSTRUCTIONS.

IMPORTANT: Before installing, make certain the AC Power to the fixture is off to avoid electric shock.

IMPORTANT: An un-switched AC power source of 100VAC to 347VAC is required. This device is designed for use in fixtures listed for dry and damp locations

IMPORTANT: Verify that all replacement lamp types marked on the installed luminaire area also identified as suitable for use with this emergency battery pack.

IMPORTANT: It is recommended to charge the battery within half a year to prevent over discharge.

CAUTION: Make sure all electrical connections conform to the National Electrical Code and all applicable local regulations.

CAUTION: Do not let power supply cords touch hot surfaces.

CAUTION: Do not mount near gas or electric heaters.