Test Report

IES LM-80-15 Approved Method for Measuring Lumen Maintenance of LED Light Sources

Report no. : SLED-20-077-R01
Testing start date : 2019.08.19
Testing completion date : 2020.11.10
Report issued date : 2020.07.24
Report revised date : 2021.03.26

Client	Testing performed by
SAMSUNG ELECTRONICS LED BUSINESS Lighting Marketing Group	**SAMSUNG ELECTRONICS LED BUSINESS** 1, Samsung-ro, Giheung-gu, Yongin-si, Gyeonggi-do 17113, Korea e-mail) kwon.sc@samsung.com
Tested By	**Technical Manager**
KyungYeup Kwak	DooSung Park
Test Personal Name & Signatory	**Approval Name & Signatory**

The above test report is the accredited test result by Korea Laboratory Accreditation Scheme, which signed the ILAC-MRA.

※ If you need confirmation about the authenticity of the test report, please contact the above contact information.

SAMSUNG ELECTRONICS LED BUSINESS

Accredited by KOLAS, Republic of KOREA

This report may not be reproduced except in full
without permission of Samsung Electronics

■ Test Report Information ■

1. ■ This test report complies with KS Q ISO/IEC 17025 and KOLAS accreditation regulations.
2. □ This test report does not comply with KS Q ISO/IEC 17025 and KOLAS accreditation regulations.
3. The test results are limited to samples provided by the client and cannot be partially replicated without the approval of this authority, except as a whole.
4. If a statement of conformity is provided in this report, the applied decision rule does not apply the measurement uncertainty except for the case where the measurement uncertainty is mentioned in the above test method.
5. The test results marked ◎ are not accredited by KOLAS.
6. The test results received from external providers for the test results marked ◐.
7. The data provided by clients marked ★ are not guaranteed by the laboratory.

■ Revision History ■

Date	Revision History	Writer	
		Drawn	Approved
2020.07.24	Rev.0 : New Version	K.Y.KWAK	D.S.PARK
2021.03.26	Rev.1 : Extended Evaluation Time	K.Y.KWAK	D.S.PARK

This report may not be reproduced except in full
without permission of Samsung Electronics

SAMSUNG ELECTRONICS LED BUSINESS
1, Samsung-ro, Giheung-gu, Yongin-si,
Gyeonggi-do 17113, Korea

■ Test Summary ■

Life test condition			Summary of result		
Test condition	Current (mA)	Case temperature (℃)	Test duration (h)	Average lumen maintenance (%)	Maximum chromaticity shift (△u'v')
1	1 620	55.1	10 000	97.9	0.000 9
2	1 620	85.0	10 000	97.5	0.001 0
3	1 620	105.1	10 000	97.1	0.001 4

1. Number of the sample

- 20 Packages tested at actual case temperature 55.1 ℃
- 20 Packages tested at actual case temperature 85.0 ℃
- 20 Packages tested at actual case temperature 105.1 ℃

※ Sampling method : Minimum three manufacturing lots with each manufacturing lot built from different wafer lots built on non-consecutive days.

2. Description of LED light sources

- [★] Tested model code : SPHWHAHDNM23YZV3DC
- [★] Product series : COB D-Gen.3 Plus (SPHWH*HDN**3*****C)
- [★] Sample manufacturer : Samsung Electronics
- [★] Sample Type : LED Package
- [★] Package dimension : (28.0 × 28.0) ㎜
- [★] Minimum die spacing : 0.30 ㎜
- [★] CCT / CRI (Nominal) : 3 000 K / 70

3. Location of Test

■ Permanent Testing Lab ☐ On Site Testing

(Address : 1, Samsung-ro, Giheung-gu, Yongin-si, Gyeonggi-do 17113, Korea)

4. Description of auxiliary equipment and Operating time

1) Instrument Integrating sphere ISP1000-100
2) Instrument CAS140-CT
3) Keithley 2425 Sourcemeter
4) Electrical condition
- [★] Drive current : 1 620 ㎃
- [★] Typical voltage : 51.69 V
- [★] Total input power : 83.74 W
- [★] Average current density per LED die : 181 ㎃/㎟
- [★] Average power density per LED die : 0.52 W/㎟

* LED packages are driven with a constant direct current.

5) Test duration : 10 000 h

This report may not be reproduced except in full without permission of Samsung Electronics

5. Ambient conditions including airflow, temperature and relative humidity

The minimal airflow is maintained in chamber.

The ambient temperature around the LED packages inside chamber is controlled by air flowing and the thermocouple readings are monitored.

- Case temperature : Contorlled to -2 ℃
- Surrounding air temperature : Contorlled to -5 ℃
- Relative humidity : < 65 % R.H.

6. Case temperature (Test point temperature)

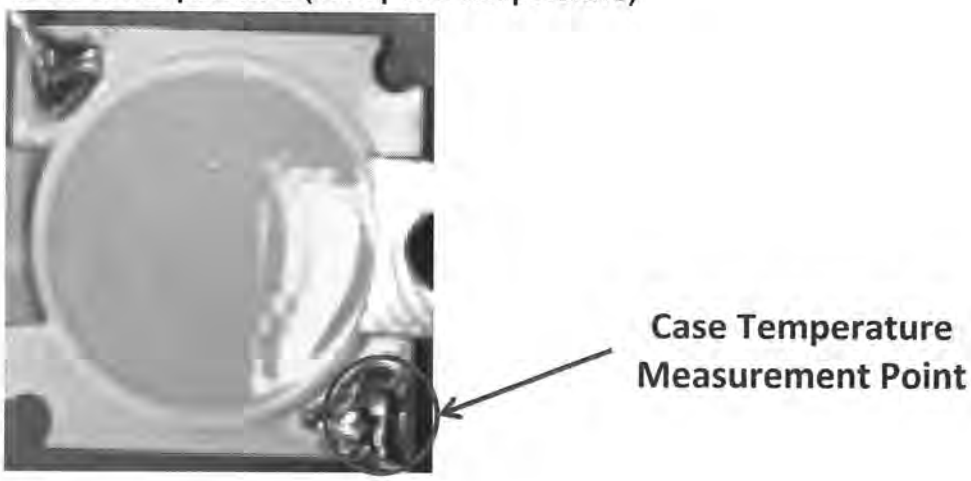

7. Drive current of the LED light source during lifetime test

See Sub-clause 9.1, 9.2 and 9.3

8. Initial luminous flux and forward voltage

See the table

9. Lumen maintenance data for each individual LED light source

See the table

This report may not be reproduced except in full
without permission of Samsung Electronics

SAMSUNG ELECTRONICS LED BUSINESS
1, Samsung-ro, Giheung-gu, Yongin-si,
Gyeonggi-do 17113, Korea

9.1 Test condition 1 **55 ℃**

Drive Current **1 620 mA**

Measurement Current **1 620 mA**

No.	Flux (lm)	Vf (V)	Lumen Maintenance (%)						
	0 h		500 h	1 000 h	2 000 h	3 000 h	4 000 h	5 000 h	6 000 h
1	15 089	51.48	99.9	99.9	99.5	99.3	99.2	99.0	99.0
2	15 450	51.61	99.9	99.9	99.5	99.5	99.4	99.0	98.7
3	15 296	51.64	100.0	100.0	99.7	99.6	99.4	99.2	98.8
4	15 168	51.91	100.2	99.7	99.6	99.4	99.1	99.1	98.8
5	15 394	51.74	100.1	99.9	99.5	99.2	99.2	98.9	98.8
6	15 150	51.62	100.0	99.4	99.0	98.7	98.5	98.3	98.3
7	15 384	51.65	99.7	99.4	99.0	98.8	98.6	98.5	98.6
8	15 222	51.87	99.8	99.8	99.5	99.5	99.1	98.8	98.8
9	15 249	51.64	100.0	99.7	99.5	99.3	99.1	98.8	98.7
10	15 324	51.51	99.8	99.7	99.4	99.0	98.8	98.6	98.8
11	15 224	51.57	100.1	100.0	99.6	99.2	99.2	98.9	98.7
12	15 295	51.69	99.9	99.8	99.3	99.3	99.2	98.9	98.7
13	15 154	51.75	99.6	99.3	98.9	98.6	98.4	98.2	98.3
14	15 338	52.08	99.8	99.7	99.6	99.3	98.9	98.9	98.9
15	15 198	51.67	99.8	99.7	99.5	99.3	99.1	98.9	98.7
16	15 088	51.65	99.8	99.8	99.6	99.6	99.3	98.9	98.7
17	15 160	51.54	100.0	99.6	99.3	99.3	99.1	98.9	98.7
18	15 394	51.94	100.0	99.8	99.7	99.3	99.2	99.1	98.6
19	15 199	51.48	99.9	99.5	99.2	98.7	98.5	98.5	98.5
20	15 322	51.76	99.8	99.6	99.3	99.2	98.8	98.8	98.8
Mean	15 255	51.69	99.9	99.7	99.4	99.2	99.0	98.8	98.7
Median	15 237	51.65	99.9	99.7	99.5	99.3	99.1	98.9	98.7
std.dev	106.3	0.16	0.2	0.2	0.2	0.3	0.3	0.3	0.2
Max	15 450	52.08	100.2	100.0	99.7	99.6	99.4	99.2	99.0
Min	15 088	51.48	99.6	99.3	98.9	98.6	98.4	98.2	98.3

This report may not be reproduced except in full
without permission of Samsung Electronics

SAMSUNG ELECTRONICS LED BUSINESS
1, Samsung-ro, Giheung-gu, Yongin-si,
Gyeonggi-do 17113, Korea

9.1 Test condition 1 **55 ℃**

Drive Current **1 620 mA**

Measurement Current **1 620 mA**

No.	Lumen Maintenance (%)								
	7 000 h	8 000 h	9 000 h	10 000 h	11 000 h	12 000 h	13 000 h	14 000 h	15 000 h
1	98.9	98.5	98.3	98.1					
2	98.5	98.4	98.1	98.2					
3	98.4	97.9	97.5	97.2					
4	98.6	98.5	98.1	98.4					
5	98.5	98.3	98.1	97.8					
6	98.2	98.0	97.7	97.7					
7	98.2	98.0	97.7	97.5					
8	98.5	98.4	97.9	98.1					
9	98.5	98.1	97.7	97.5					
10	98.7	98.7	98.4	98.3					
11	98.5	98.2	98.0	98.1					
12	98.5	98.5	98.3	98.3					
13	98.2	98.0	97.8	97.8					
14	98.6	98.5	98.2	98.0					
15	98.7	98.5	98.2	98.3					
16	98.6	98.4	98.0	98.0					
17	98.6	98.3	98.0	98.0					
18	98.4	98.2	97.8	97.4					
19	98.5	98.4	98.0	97.7					
20	98.5	98.3	97.9	97.6					
Mean	98.5	98.3	98.0	97.9					
Median	98.5	98.3	98.0	98.0					
std.dev	0.2	0.2	0.2	0.3					
Max	98.9	98.7	98.4	98.4					
Min	98.2	97.9	97.5	97.2					

This report may not be reproduced except in full
without permission of Samsung Electronics

SAMSUNG ELECTRONICS LED BUSINESS
1, Samsung-ro, Giheung-gu, Yongin-si,
Gyeonggi-do 17113, Korea

9.1 Test condition 1 **55 ℃**

Drive Current **1 620 mA**

Measurement Current **1 620 mA**

No.	u'	v'	Chromaticity Shift (△u'v')						
	0 h		500 h	1 000 h	2 000 h	3 000 h	4 000 h	5 000 h	6 000 h
1	0.248 8	0.521 6	0.000 0	0.000 1	0.000 2	0.000 2	0.000 2	0.000 3	0.000 3
2	0.247 5	0.521 0	0.000 1	0.000 2	0.000 3	0.000 4	0.000 4	0.000 3	0.000 4
3	0.250 2	0.519 3	0.000 1	0.000 0	0.000 2	0.000 2	0.000 3	0.000 3	0.000 3
4	0.248 6	0.521 3	0.000 1	0.000 1	0.000 2	0.000 3	0.000 3	0.000 3	0.000 2
5	0.249 7	0.519 4	0.000 0	0.000 1	0.000 2	0.000 2	0.000 2	0.000 4	0.000 3
6	0.247 7	0.522 1	0.000 2	0.000 1	0.000 2	0.000 2	0.000 3	0.000 4	0.000 3
7	0.250 3	0.520 5	0.000 0	0.000 0	0.000 2	0.000 2	0.000 3	0.000 4	0.000 4
8	0.251 1	0.520 5	0.000 0	0.000 1	0.000 1	0.000 2	0.000 3	0.000 3	0.000 3
9	0.247 2	0.519 6	0.000 0	0.000 1	0.000 4	0.000 3	0.000 3	0.000 3	0.000 2
10	0.250 2	0.519 1	0.000 1	0.000 2	0.000 3	0.000 3	0.000 3	0.000 3	0.000 4
11	0.250 1	0.522 1	0.000 1	0.000 1	0.000 2	0.000 2	0.000 3	0.000 4	0.000 3
12	0.253 1	0.520 2	0.000 1	0.000 2	0.000 4	0.000 2	0.000 1	0.000 3	0.000 4
13	0.250 6	0.518 7	0.000 1	0.000 0	0.000 2	0.000 2	0.000 4	0.000 4	0.000 3
14	0.248 2	0.520 5	0.000 0	0.000 1	0.000 2	0.000 1	0.000 1	0.000 2	0.000 3
15	0.250 2	0.520 6	0.000 1	0.000 1	0.000 2	0.000 3	0.000 3	0.000 3	0.000 4
16	0.249 9	0.521 6	0.000 0	0.000 1	0.000 1	0.000 2	0.000 2	0.000 2	0.000 3
17	0.250 8	0.519 2	0.000 3	0.000 3	0.000 2	0.000 2	0.000 3	0.000 4	0.000 4
18	0.249 4	0.518 3	0.000 1	0.000 2	0.000 1	0.000 3	0.000 4	0.000 3	0.000 3
19	0.251 3	0.518 1	0.000 1	0.000 1	0.000 1	0.000 2	0.000 2	0.000 3	0.000 4
20	0.246 5	0.520 6	0.000 1	0.000 1	0.000 2	0.000 3	0.000 2	0.000 3	0.000 2
Mean	0.249 6	0.520 2	0.000 1	0.000 1	0.000 2	0.000 2	0.000 3	0.000 3	0.000 3
Median	0.250 0	0.520 5	0.000 1	0.000 1	0.000 2	0.000 2	0.000 3	0.000 3	0.000 3
std.dev	0.001 6	0.001 2	0.000 1	0.000 1	0.000 1	0.000 1	0.000 1	0.000 0	0.000 1
Max	0.253 1	0.522 1	0.000 3	0.000 3	0.000 4	0.000 4	0.000 4	0.000 4	0.000 4
Min	0.246 5	0.518 1	0.000 0	0.000 0	0.000 1	0.000 1	0.000 1	0.000 2	0.000 2

This report may not be reproduced except in full
without permission of Samsung Electronics

SAMSUNG ELECTRONICS LED BUSINESS
1, Samsung-ro, Giheung-gu, Yongin-si,
Gyeonggi-do 17113, Korea

9.1 Test condition 1 **55 ℃**

Drive Current **1 620 mA**

Measurement Current **1 620 mA**

No.	Chromaticity Shift (△u'v')								
	7 000 h	8 000 h	9 000 h	10 000 h	11 000 h	12 000 h	13 000 h	14 000 h	15 000 h
1	0.000 3	0.000 3	0.000 5	0.000 5					
2	0.000 3	0.000 4	0.000 5	0.000 5					
3	0.000 3	0.000 4	0.000 4	0.000 4					
4	0.000 3	0.000 4	0.000 5	0.000 4					
5	0.000 5	0.000 7	0.000 8	0.000 8					
6	0.000 4	0.000 6	0.000 6	0.000 7					
7	0.000 5	0.000 5	0.000 6	0.000 6					
8	0.000 3	0.000 3	0.000 4	0.000 4					
9	0.000 3	0.000 3	0.000 4	0.000 5					
10	0.000 5	0.000 5	0.000 6	0.000 6					
11	0.000 4	0.000 5	0.000 5	0.000 5					
12	0.000 4	0.000 4	0.000 6	0.000 6					
13	0.000 3	0.000 3	0.000 4	0.000 5					
14	0.000 4	0.000 3	0.000 4	0.000 5					
15	0.000 4	0.000 4	0.000 5	0.000 5					
16	0.000 3	0.000 3	0.000 5	0.000 5					
17	0.000 5	0.000 5	0.000 9	0.000 9					
18	0.000 4	0.000 4	0.000 4	0.000 5					
19	0.000 4	0.000 5	0.000 5	0.000 5					
20	0.000 3	0.000 4	0.000 6	0.000 6					
Mean	0.000 4	0.000 4	0.000 5	0.000 6					
Median	0.000 4	0.000 4	0.000 5	0.000 5					
std.dev	0.000 1	0.000 1	0.000 1	0.000 1					
Max	0.000 5	0.000 7	0.000 9	0.000 9					
Min	0.000 3	0.000 3	0.000 4	0.000 4					

This report may not be reproduced except in full
without permission of Samsung Electronics

SAMSUNG ELECTRONICS LED BUSINESS
1, Samsung-ro, Giheung-gu, Yongin-si,
Gyeonggi-do 17113, Korea

9.1 Test condition 1 **55 ℃**

Drive Current **1 620 mA**

Measurement Current **1 620 mA**

No.	CCT (K)							
	0 h	500 h	1 000 h	2 000 h	3 000 h	4 000 h	5 000 h	6 000 h
1	3 045	3 045	3 046	3 047	3 045	3 043	3 040	3 042
2	3 083	3 080	3 080	3 082	3 082	3 080	3 080	3 082
3	3 026	3 023	3 025	3 027	3 024	3 022	3 021	3 024
4	3 053	3 051	3 049	3 047	3 048	3 048	3 048	3 048
5	3 038	3 038	3 036	3 036	3 033	3 036	3 034	3 031
6	3 070	3 065	3 068	3 070	3 068	3 065	3 061	3 062
7	3 016	3 017	3 015	3 013	3 012	3 010	3 011	3 011
8	2 995	2 994	2 997	2 997	2 993	2 988	2 991	2 993
9	3 102	3 102	3 104	3 108	3 102	3 102	3 102	3 101
10	3 028	3 030	3 032	3 033	3 031	3 030	3 028	3 029
11	3 010	3 012	3 012	3 012	3 006	3 003	3 003	3 004
12	2 948	2 950	2 953	2 956	2 952	2 950	2 947	2 940
13	3 019	3 021	3 020	3 023	3 018	3 009	3 011	3 014
14	3 070	3 069	3 072	3 073	3 071	3 070	3 066	3 066
15	3 017	3 016	3 021	3 012	3 010	3 011	3 010	3 010
16	3 019	3 019	3 018	3 021	3 015	3 013	3 014	3 017
17	3 010	3 002	3 003	3 005	3 005	3 004	3 001	3 001
18	3 054	3 053	3 050	3 052	3 048	3 047	3 048	3 048
19	3 006	3 004	3 003	3 003	3 003	3 003	2 999	2 998
20	3 114	3 114	3 117	3 119	3 117	3 115	3 114	3 110
Mean	3 036	3 035	3 036	3 037	3 034	3 032	3 031	3 032
Median	3 027	3 027	3 029	3 030	3 028	3 026	3 025	3 026
std.dev	39	39	39	39	40	40	40	40
Max	3 114	3 114	3 117	3 119	3 117	3 115	3 114	3 110
Min	2 948	2 950	2 953	2 956	2 952	2 950	2 947	2 940

This report may not be reproduced except in full
without permission of Samsung Electronics

SAMSUNG ELECTRONICS LED BUSINESS
1, Samsung-ro, Giheung-gu, Yongin-si,
Gyeonggi-do 17113, Korea

9.1 Test condition 1 **55 ℃**

Drive Current **1 620 mA**

Measurement Current **1 620 mA**

No.	CCT (K)								
	7 000 h	8 000 h	9 000 h	10 000 h	11 000 h	12 000 h	13 000 h	14 000 h	15 000 h
1	3 038	3 038	3 033	3 035					
2	3 078	3 076	3 075	3 078					
3	3 027	3 027	3 024	3 026					
4	3 047	3 043	3 043	3 046					
5	3 027	3 022	3 018	3 020					
6	3 061	3 055	3 056	3 056					
7	3 012	3 009	3 008	3 006					
8	2 993	2 992	2 992	2 993					
9	3 101	3 102	3 101	3 101					
10	3 022	3 019	3 016	3 019					
11	3 002	2 999	2 999	2 998					
12	2 941	2 940	2 935	2 937					
13	3 014	3 016	3 016	3 017					
14	3 066	3 063	3 062	3 057					
15	3 012	3 014	3 013	3 014					
16	3 017	3 015	3 008	3 010					
17	2 999	2 998	2 988	2 987					
18	3 048	3 046	3 047	3 045					
19	2 996	2 995	2 995	2 998					
20	3 112	3 110	3 102	3 104					
Mean	3 031	3 029	3 027	3 027					
Median	3 024	3 021	3 017	3 019					
std.dev	40	40	40	40					
Max	3 112	3 110	3 102	3 104					
Min	2 941	2 940	2 935	2 937					

This report may not be reproduced except in full
without permission of Samsung Electronics

SAMSUNG ELECTRONICS LED BUSINESS
1, Samsung-ro, Giheung-gu, Yongin-si,
Gyeonggi-do 17113, Korea

9.2 Test condition 2 **85 ℃**

Drive Current **1 620 mA**

Measurement Current **1 620 mA**

No.	Flux (lm)	Vf (V)	Lumen Maintenance (%)						
	0 h		500 h	1 000 h	2 000 h	3 000 h	4 000 h	5 000 h	6 000 h
1	15 327	51.70	99.8	99.5	99.2	99.1	98.8	98.6	98.3
2	15 213	51.64	99.8	99.5	99.2	99.1	98.9	98.7	98.5
3	15 193	51.56	99.9	99.3	99.1	98.8	98.6	98.3	98.2
4	15 106	51.75	99.9	99.6	99.3	99.0	98.7	98.8	98.5
5	15 270	52.06	100.0	99.7	99.5	99.3	99.1	98.5	98.2
6	15 361	51.71	99.9	99.6	99.3	99.0	98.9	98.8	98.5
7	15 327	51.85	99.8	99.7	99.4	99.1	98.9	98.7	98.5
8	15 454	51.61	99.8	99.5	99.1	99.0	98.9	98.7	98.5
9	15 288	51.84	99.9	99.7	99.3	99.2	98.9	98.7	98.5
10	15 224	51.64	99.9	99.5	99.4	99.2	98.9	98.5	98.1
11	15 426	51.88	99.8	99.6	99.2	98.9	98.7	98.5	98.4
12	15 242	51.58	99.9	99.6	99.4	99.1	98.9	98.6	98.3
13	15 345	51.52	99.9	99.5	99.2	99.1	98.8	98.5	98.0
14	15 325	51.92	100.1	99.9	99.6	99.4	99.2	99.0	98.6
15	15 249	51.45	99.9	99.9	99.5	99.4	99.3	99.1	98.7
16	15 070	51.75	99.9	99.6	99.2	99.0	98.8	98.7	98.2
17	15 150	51.71	100.0	99.6	99.3	99.0	98.8	98.7	98.5
18	15 319	51.97	99.9	99.5	99.3	99.1	98.9	98.7	98.5
19	15 127	51.89	99.9	99.7	99.3	99.2	99.1	99.0	98.6
20	15 241	51.79	99.9	99.6	99.2	99.0	98.7	98.6	98.4
Mean	15 263	51.74	99.9	99.6	99.3	99.1	98.9	98.7	98.4
Median	15 260	51.73	99.9	99.6	99.3	99.1	98.9	98.7	98.5
std.dev	102.1	0.16	0.1	0.1	0.1	0.2	0.2	0.2	0.2
Max	15 454	52.06	100.1	99.9	99.6	99.4	99.3	99.1	98.7
Min	15 070	51.45	99.8	99.3	99.1	98.8	98.6	98.3	98.0

This report may not be reproduced except in full
without permission of Samsung Electronics

SAMSUNG ELECTRONICS LED BUSINESS
1, Samsung-ro, Giheung-gu, Yongin-si,
Gyeonggi-do 17113, Korea

9.2 Test condition 2 **85 ℃**

Drive Current **1 620 mA**

Measurement Current **1 620 mA**

No.	Lumen Maintenance (%)								
	7 000 h	8 000 h	9 000 h	10 000 h	11 000 h	12 000 h	13 000 h	14 000 h	15 000 h
1	98.1	98.0	97.8	97.5					
2	98.2	98.0	97.6	97.4					
3	98.0	97.8	98.0	97.7					
4	98.3	98.1	97.9	97.6					
5	98.1	97.8	97.6	97.3					
6	98.6	98.4	98.2	97.9					
7	98.3	98.0	97.8	97.6					
8	98.1	98.0	97.9	97.5					
9	98.4	98.1	97.8	97.5					
10	98.0	97.6	97.4	97.0					
11	98.3	98.1	97.9	97.7					
12	98.0	97.7	97.4	97.0					
13	97.8	97.5	97.3	97.0					
14	98.4	98.3	98.1	97.8					
15	98.3	98.1	97.9	97.6					
16	98.0	97.8	97.7	97.3					
17	98.3	98.1	97.9	97.7					
18	98.5	98.3	98.1	97.7					
19	98.2	98.3	98.1	97.9					
20	98.2	98.0	97.7	97.4					
Mean	98.2	98.0	97.8	97.5					
Median	98.2	98.0	97.8	97.5					
std.dev	0.2	0.2	0.3	0.3					
Max	98.6	98.4	98.2	97.9					
Min	97.8	97.5	97.3	97.0					

This report may not be reproduced except in full
without permission of Samsung Electronics

SAMSUNG ELECTRONICS LED BUSINESS
1, Samsung-ro, Giheung-gu, Yongin-si,
Gyeonggi-do 17113, Korea

9.2 Test condition 2 **85 ℃**

Drive Current **1 620 mA**

Measurement Current **1 620 mA**

No.	u'	v'	Chromaticity Shift (△u'v')						
	0 h		500 h	1 000 h	2 000 h	3 000 h	4 000 h	5 000 h	6 000 h
1	0.248 4	0.520 8	0.000 1	0.000 2	0.000 2	0.000 2	0.000 2	0.000 4	0.000 5
2	0.248 5	0.521 4	0.000 2	0.000 3	0.000 2	0.000 3	0.000 5	0.000 4	0.000 5
3	0.247 2	0.520 8	0.000 3	0.000 5	0.000 4	0.000 5	0.000 5	0.000 5	0.000 5
4	0.251 7	0.519 3	0.000 3	0.000 5	0.000 4	0.000 5	0.000 5	0.000 6	0.000 6
5	0.249 6	0.521 4	0.000 2	0.000 3	0.000 2	0.000 3	0.000 4	0.000 4	0.000 4
6	0.246 6	0.521 7	0.000 2	0.000 3	0.000 3	0.000 4	0.000 4	0.000 5	0.000 5
7	0.249 3	0.521 5	0.000 3	0.000 4	0.000 2	0.000 3	0.000 4	0.000 4	0.000 4
8	0.249 4	0.520 5	0.000 3	0.000 3	0.000 2	0.000 3	0.000 3	0.000 5	0.000 5
9	0.252 4	0.519 8	0.000 2	0.000 2	0.000 2	0.000 3	0.000 4	0.000 3	0.000 5
10	0.247 2	0.520 5	0.000 2	0.000 3	0.000 4	0.000 4	0.000 4	0.000 5	0.000 5
11	0.248 0	0.519 7	0.000 3	0.000 3	0.000 4	0.000 4	0.000 5	0.000 5	0.000 4
12	0.250 5	0.519 3	0.000 1	0.000 2	0.000 2	0.000 3	0.000 3	0.000 4	0.000 5
13	0.246 5	0.519 7	0.000 2	0.000 3	0.000 3	0.000 4	0.000 4	0.000 5	0.000 4
14	0.249 6	0.519 0	0.000 2	0.000 3	0.000 3	0.000 4	0.000 5	0.000 3	0.000 4
15	0.248 0	0.519 5	0.000 2	0.000 4	0.000 4	0.000 5	0.000 6	0.000 5	0.000 4
16	0.247 1	0.522 0	0.000 3	0.000 3	0.000 2	0.000 4	0.000 4	0.000 4	0.000 4
17	0.250 4	0.518 6	0.000 1	0.000 3	0.000 4	0.000 4	0.000 5	0.000 5	0.000 5
18	0.252 3	0.520 8	0.000 2	0.000 3	0.000 2	0.000 3	0.000 4	0.000 4	0.000 4
19	0.248 1	0.519 6	0.000 2	0.000 5	0.000 3	0.000 5	0.000 5	0.000 6	0.000 6
20	0.250 6	0.520 1	0.000 2	0.000 2	0.000 3	0.000 3	0.000 4	0.000 4	0.000 4
Mean	0.249 1	0.520 3	0.000 2	0.000 3	0.000 3	0.000 4	0.000 4	0.000 4	0.000 5
Median	0.248 9	0.520 3	0.000 2	0.000 3	0.000 3	0.000 4	0.000 4	0.000 4	0.000 5
std.dev	0.001 8	0.001 0	0.000 1	0.000 1	0.000 1	0.000 1	0.000 1	0.000 1	0.000 1
Max	0.252 4	0.522 0	0.000 3	0.000 5	0.000 4	0.000 5	0.000 6	0.000 6	0.000 6
Min	0.246 5	0.518 6	0.000 1	0.000 2	0.000 2	0.000 2	0.000 2	0.000 3	0.000 4

This report may not be reproduced except in full
without permission of Samsung Electronics

SAMSUNG ELECTRONICS LED BUSINESS
1, Samsung-ro, Giheung-gu, Yongin-si,
Gyeonggi-do 17113, Korea

9.2 Test condition 2 **85 ℃**

Drive Current **1 620 mA**

Measurement Current **1 620 mA**

No.	Chromaticity Shift (△u'v')								
	7 000 h	8 000 h	9 000 h	10 000 h	11 000 h	12 000 h	13 000 h	14 000 h	15 000 h
1	0.000 5	0.000 6	0.000 6	0.000 6					
2	0.000 5	0.000 6	0.000 7	0.000 8					
3	0.000 6	0.000 6	0.000 6	0.000 6					
4	0.000 7	0.000 7	0.000 9	0.000 9					
5	0.000 4	0.000 4	0.000 5	0.000 4					
6	0.000 5	0.000 6	0.000 7	0.000 7					
7	0.000 5	0.000 6	0.000 7	0.000 6					
8	0.000 6	0.000 7	0.000 8	0.000 8					
9	0.000 5	0.000 5	0.000 6	0.000 5					
10	0.000 5	0.000 5	0.000 6	0.000 6					
11	0.000 4	0.000 5	0.000 6	0.000 7					
12	0.000 3	0.000 4	0.000 5	0.000 5					
13	0.000 5	0.000 5	0.000 6	0.000 6					
14	0.000 5	0.000 5	0.000 7	0.000 6					
15	0.000 5	0.000 8	0.000 9	0.001 0					
16	0.000 6	0.000 6	0.000 8	0.000 8					
17	0.000 6	0.000 6	0.000 7	0.000 7					
18	0.000 4	0.000 5	0.000 5	0.000 5					
19	0.000 7	0.000 8	0.000 9	0.000 8					
20	0.000 4	0.000 6	0.000 6	0.000 7					
Mean	0.000 5	0.000 6	0.000 7	0.000 7					
Median	0.000 5	0.000 6	0.000 7	0.000 7					
std.dev	0.000 1	0.000 1	0.000 1	0.000 1					
Max	0.000 7	0.000 8	0.000 9	0.001 0					
Min	0.000 3	0.000 4	0.000 5	0.000 4					

This report may not be reproduced except in full
without permission of Samsung Electronics

SAMSUNG ELECTRONICS LED BUSINESS
1, Samsung-ro, Giheung-gu, Yongin-si,
Gyeonggi-do 17113, Korea

9.2 Test condition 2 **85 ℃**

Drive Current **1 620 mA**

Measurement Current **1 620 mA**

No.	CCT (K)							
	0 h	500 h	1 000 h	2 000 h	3 000 h	4 000 h	5 000 h	6 000 h
1	3 062	3 059	3 056	3 058	3 058	3 058	3 055	3 052
2	3 054	3 051	3 046	3 054	3 053	3 056	3 052	3 056
3	3 092	3 089	3 083	3 084	3 085	3 082	3 081	3 082
4	2 988	2 990	2 978	2 982	2 981	2 984	2 983	2 980
5	3 027	3 027	3 021	3 023	3 022	3 021	3 021	3 023
6	3 101	3 099	3 095	3 097	3 094	3 095	3 091	3 093
7	3 034	3 037	3 035	3 037	3 032	3 037	3 032	3 030
8	3 037	3 040	3 035	3 034	3 029	3 032	3 029	3 029
9	2 967	2 968	2 964	2 966	2 962	2 965	2 965	2 959
10	3 094	3 094	3 091	3 092	3 089	3 090	3 088	3 089
11	3 080	3 082	3 075	3 077	3 076	3 079	3 079	3 079
12	3 018	3 019	3 014	3 020	3 014	3 017	3 019	3 020
13	3 119	3 115	3 112	3 114	3 111	3 112	3 113	3 113
14	3 044	3 045	3 044	3 040	3 039	3 043	3 038	3 041
15	3 081	3 080	3 076	3 079	3 075	3 076	3 074	3 074
16	3 086	3 088	3 083	3 084	3 077	3 080	3 080	3 082
17	3 027	3 027	3 020	3 021	3 021	3 020	3 019	3 017
18	2 964	2 963	2 962	2 960	2 958	2 958	2 956	2 957
19	3 078	3 076	3 068	3 072	3 068	3 070	3 071	3 069
20	3 011	3 012	3 013	3 012	3 008	3 010	3 005	3 004
Mean	3 048	3 048	3 044	3 045	3 043	3 044	3 043	3 043
Median	3 049	3 048	3 045	3 047	3 046	3 049	3 045	3 047
std.dev	44	43	43	44	44	43	44	45
Max	3 119	3 115	3 112	3 114	3 111	3 112	3 113	3 113
Min	2 964	2 963	2 962	2 960	2 958	2 958	2 956	2 957

This report may not be reproduced except in full
without permission of Samsung Electronics

SAMSUNG ELECTRONICS LED BUSINESS
1, Samsung-ro, Giheung-gu, Yongin-si,
Gyeonggi-do 17113, Korea

9.2 Test condition 2 **85 ℃**

Drive Current **1 620 mA**

Measurement Current **1 620 mA**

No.	CCT (K)								
	7 000 h	8 000 h	9 000 h	10 000 h	11 000 h	12 000 h	13 000 h	14 000 h	15 000 h
1	3 051	3 050	3 051	3 055					
2	3 057	3 054	3 053	3 057					
3	3 083	3 083	3 081	3 081					
4	2 977	2 979	2 979	2 982					
5	3 021	3 021	3 023	3 023					
6	3 093	3 090	3 089	3 088					
7	3 028	3 025	3 029	3 030					
8	3 027	3 028	3 025	3 024					
9	2 960	2 958	2 961	2 959					
10	3 088	3 087	3 087	3 087					
11	3 077	3 078	3 077	3 076					
12	3 015	3 017	3 017	3 018					
13	3 118	3 117	3 119	3 120					
14	3 039	3 042	3 036	3 037					
15	3 071	3 063	3 059	3 057					
16	3 083	3 080	3 075	3 071					
17	3 018	3 016	3 016	3 017					
18	2 956	2 957	2 960	2 960					
19	3 069	3 070	3 072	3 073					
20	3 004	3 004	3 006	3 005					
Mean	3 042	3 041	3 041	3 041					
Median	3 045	3 046	3 043	3 046					
std.dev	45	45	44	43					
Max	3 118	3 117	3 119	3 120					
Min	2 956	2 957	2 960	2 959					

This report may not be reproduced except in full
without permission of Samsung Electronics

SAMSUNG ELECTRONICS LED BUSINESS
1, Samsung-ro, Giheung-gu, Yongin-si,
Gyeonggi-do 17113, Korea

9.3 Test condition 3 **105 ℃**

Drive Current **1 620 mA**

Measurement Current **1 620 mA**

No.	Flux (lm)	Vf (V)	Lumen Maintenance (%)						
	0 h		500 h	1 000 h	2 000 h	3 000 h	4 000 h	5 000 h	6 000 h
1	15 140	51.47	100.0	99.4	99.1	99.0	98.7	98.5	98.3
2	15 274	51.86	99.9	99.4	98.9	98.7	98.7	98.5	98.2
3	15 210	51.69	99.8	99.0	98.7	98.4	98.1	97.9	97.8
4	15 274	51.76	99.9	99.4	99.2	99.0	98.7	98.2	98.0
5	15 355	51.67	99.8	99.3	98.9	98.6	98.1	98.0	97.9
6	15 366	51.77	99.9	99.5	99.1	98.7	98.3	98.1	98.0
7	15 312	51.85	99.8	99.4	99.2	98.8	98.7	98.4	98.2
8	15 131	51.66	99.9	99.4	99.1	98.8	98.3	98.3	97.8
9	15 179	51.99	99.7	99.4	99.1	99.0	98.7	98.6	98.4
10	15 205	51.98	99.9	99.5	99.1	99.1	98.8	98.4	98.1
11	15 355	51.68	99.8	99.4	99.3	99.0	98.9	98.7	98.3
12	15 392	51.61	99.7	99.2	99.0	98.9	98.7	98.4	98.3
13	15 378	51.61	99.8	99.3	98.9	98.8	98.5	98.3	98.1
14	15 210	51.65	99.8	99.3	99.2	99.2	98.7	98.6	98.5
15	15 241	51.41	99.8	99.1	98.9	98.5	98.3	98.2	97.9
16	15 265	51.78	99.7	99.3	98.9	98.8	98.2	98.2	98.0
17	15 307	51.47	99.8	99.3	99.1	98.9	98.7	98.5	98.5
18	15 269	51.90	99.7	99.1	98.6	98.5	98.3	98.1	97.8
19	15 141	51.68	99.8	99.2	98.9	98.7	98.2	98.2	97.8
20	15 228	51.74	99.8	99.0	98.8	98.7	98.3	98.2	98.0
Mean	15 262	51.71	99.8	99.3	99.0	98.8	98.5	98.3	98.1
Median	15 267	51.69	99.8	99.3	99.1	98.8	98.6	98.3	98.0
std.dev	81.7	0.16	0.1	0.1	0.2	0.2	0.2	0.2	0.2
Max	15 392	51.99	100.0	99.5	99.3	99.2	98.9	98.7	98.5
Min	15 131	51.41	99.7	99.0	98.6	98.4	98.1	97.9	97.8

This report may not be reproduced except in full
without permission of Samsung Electronics

SAMSUNG ELECTRONICS LED BUSINESS
1, Samsung-ro, Giheung-gu, Yongin-si,
Gyeonggi-do 17113, Korea

9.3 Test condition 3 **105 ℃**

Drive Current **1 620 mA**

Measurement Current **1 620 mA**

No.	Lumen Maintenance (%)								
	7 000 h	8 000 h	9 000 h	10 000 h	11 000 h	12 000 h	13 000 h	14 000 h	15 000 h
1	98.2	98.2	97.9	97.6					
2	97.9	97.4	97.0	96.7					
3	97.7	96.9	96.7	96.5					
4	97.8	97.7	97.5	97.1					
5	97.9	97.7	97.5	97.1					
6	97.7	97.6	97.6	97.4					
7	98.1	97.8	97.7	97.5					
8	97.7	97.5	97.3	97.1					
9	98.2	97.8	97.7	97.4					
10	98.0	97.4	97.2	97.0					
11	98.4	97.9	97.6	97.2					
12	98.1	97.7	97.3	96.6					
13	97.8	97.4	97.3	97.0					
14	98.1	97.7	97.5	97.0					
15	97.8	97.8	97.8	97.2					
16	97.6	97.3	97.3	97.2					
17	98.4	98.1	98.0	97.8					
18	97.6	97.4	97.3	97.1					
19	97.6	97.3	97.0	96.8					
20	97.6	97.2	97.0	96.6					
Mean	97.9	97.6	97.4	97.1					
Median	97.9	97.6	97.4	97.1					
std.dev	0.3	0.3	0.3	0.3					
Max	98.4	98.2	98.0	97.8					
Min	97.6	96.9	96.7	96.5					

This report may not be reproduced except in full
without permission of Samsung Electronics

SAMSUNG ELECTRONICS LED BUSINESS
1, Samsung-ro, Giheung-gu, Yongin-si,
Gyeonggi-do 17113, Korea

9.3 Test condition 3 **105 ℃**

Drive Current **1 620 mA**

Measurement Current **1 620 mA**

No.	u'	v'	Chromaticity Shift (△u'v')						
	0 h		500 h	1 000 h	2 000 h	3 000 h	4 000 h	5 000 h	6 000 h
1	0.247 7	0.521 9	0.000 1	0.000 3	0.000 4	0.000 5	0.000 5	0.000 6	0.000 6
2	0.250 8	0.522 6	0.000 2	0.000 3	0.000 4	0.000 5	0.000 6	0.000 6	0.000 7
3	0.249 1	0.520 2	0.000 2	0.000 2	0.000 2	0.000 4	0.000 3	0.000 5	0.000 6
4	0.249 1	0.520 6	0.000 1	0.000 3	0.000 5	0.000 7	0.000 7	0.000 7	0.000 7
5	0.250 3	0.522 2	0.000 1	0.000 2	0.000 3	0.000 4	0.000 5	0.000 5	0.000 6
6	0.248 2	0.519 8	0.000 2	0.000 3	0.000 3	0.000 5	0.000 6	0.000 7	0.000 7
7	0.250 2	0.518 7	0.000 2	0.000 4	0.000 5	0.000 6	0.000 6	0.000 6	0.000 7
8	0.247 0	0.522 0	0.000 2	0.000 3	0.000 4	0.000 7	0.000 6	0.000 8	0.000 7
9	0.250 1	0.522 5	0.000 2	0.000 3	0.000 5	0.000 6	0.000 6	0.000 7	0.000 7
10	0.246 0	0.520 6	0.000 2	0.000 3	0.000 3	0.000 6	0.000 6	0.000 6	0.000 7
11	0.250 1	0.521 5	0.000 3	0.000 4	0.000 5	0.000 5	0.000 6	0.000 6	0.000 7
12	0.248 2	0.521 0	0.000 2	0.000 3	0.000 3	0.000 4	0.000 5	0.000 6	0.000 8
13	0.247 8	0.520 9	0.000 2	0.000 3	0.000 3	0.000 4	0.000 5	0.000 6	0.000 7
14	0.250 3	0.520 6	0.000 2	0.000 2	0.000 4	0.000 7	0.000 7	0.000 8	0.000 8
15	0.248 5	0.521 1	0.000 2	0.000 2	0.000 3	0.000 5	0.000 5	0.000 7	0.000 7
16	0.249 1	0.522 4	0.000 3	0.000 4	0.000 4	0.000 6	0.000 7	0.000 7	0.000 7
17	0.247 3	0.521 1	0.000 2	0.000 2	0.000 3	0.000 5	0.000 6	0.000 7	0.000 6
18	0.249 4	0.522 8	0.000 1	0.000 3	0.000 3	0.000 5	0.000 6	0.000 7	0.000 7
19	0.247 7	0.521 4	0.000 2	0.000 2	0.000 2	0.000 4	0.000 4	0.000 5	0.000 6
20	0.248 4	0.519 9	0.000 1	0.000 3	0.000 4	0.000 5	0.000 7	0.000 7	0.000 6
Mean	0.248 8	0.521 2	0.000 2	0.000 3	0.000 4	0.000 5	0.000 6	0.000 6	0.000 7
Median	0.248 8	0.521 1	0.000 2	0.000 3	0.000 4	0.000 5	0.000 6	0.000 6	0.000 7
std.dev	0.001 3	0.001 1	0.000 0	0.000 1	0.000 1	0.000 1	0.000 1	0.000 1	0.000 1
Max	0.250 8	0.522 8	0.000 3	0.000 4	0.000 5	0.000 7	0.000 7	0.000 8	0.000 8
Min	0.246 0	0.518 7	0.000 1	0.000 2	0.000 2	0.000 4	0.000 3	0.000 5	0.000 6

This report may not be reproduced except in full
without permission of Samsung Electronics

SAMSUNG ELECTRONICS LED BUSINESS
1, Samsung-ro, Giheung-gu, Yongin-si,
Gyeonggi-do 17113, Korea

9.3 Test condition 3 **105 ℃**

Drive Current **1 620 mA**

Measurement Current **1 620 mA**

No.	Chromaticity Shift (△u'v')								
	7 000 h	8 000 h	9 000 h	10 000 h	11 000 h	12 000 h	13 000 h	14 000 h	15 000 h
1	0.000 8	0.000 9	0.001 0	0.001 1					
2	0.000 8	0.000 8	0.000 8	0.000 9					
3	0.000 6	0.000 9	0.001 0	0.000 9					
4	0.000 8	0.000 9	0.000 9	0.001 0					
5	0.000 8	0.001 0	0.001 1	0.001 4					
6	0.000 9	0.000 9	0.000 9	0.001 0					
7	0.000 7	0.000 7	0.000 9	0.000 9					
8	0.000 8	0.000 9	0.000 9	0.000 9					
9	0.001 0	0.001 0	0.001 1	0.001 1					
10	0.000 9	0.000 9	0.001 1	0.001 2					
11	0.000 7	0.000 8	0.000 9	0.000 9					
12	0.000 9	0.000 9	0.000 9	0.001 0					
13	0.000 8	0.000 9	0.000 9	0.001 0					
14	0.000 7	0.000 7	0.000 9	0.001 0					
15	0.000 9	0.001 0	0.001 2	0.001 4					
16	0.000 9	0.000 9	0.000 9	0.000 9					
17	0.000 8	0.000 9	0.000 9	0.001 0					
18	0.000 7	0.000 8	0.000 9	0.000 9					
19	0.000 9	0.000 9	0.001 0	0.001 1					
20	0.000 7	0.000 7	0.000 7	0.000 8					
Mean	0.000 8	0.000 9	0.000 9	0.001 0					
Median	0.000 8	0.000 9	0.000 9	0.001 0					
std.dev	0.000 1	0.000 1	0.000 1	0.000 2					
Max	0.001 0	0.001 0	0.001 2	0.001 4					
Min	0.000 6	0.000 7	0.000 7	0.000 8					

This report may not be reproduced except in full
without permission of Samsung Electronics

SAMSUNG ELECTRONICS LED BUSINESS
1, Samsung-ro, Giheung-gu, Yongin-si,
Gyeonggi-do 17113, Korea

9.3 Test condition 3 **105 ℃**

Drive Current **1 620 mA**

Measurement Current **1 620 mA**

No.	CCT (K)							
	0 h	500 h	1 000 h	2 000 h	3 000 h	4 000 h	5 000 h	6 000 h
1	3 072	3 069	3 066	3 065	3 062	3 069	3 066	3 062
2	2 988	2 988	2 982	2 985	2 983	2 986	2 982	2 975
3	3 047	3 045	3 041	3 041	3 039	3 044	3 040	3 036
4	3 045	3 043	3 039	3 040	3 037	3 038	3 037	3 033
5	3 004	3 004	2 999	2 997	2 994	2 994	2 997	2 994
6	3 073	3 069	3 068	3 067	3 065	3 065	3 061	3 059
7	3 031	3 025	3 020	3 021	3 019	3 022	3 022	3 021
8	3 088	3 090	3 090	3 091	3 090	3 081	3 082	3 075
9	3 008	3 004	3 002	2 997	2 997	3 001	2 999	2 995
10	3 125	3 119	3 119	3 118	3 117	3 119	3 115	3 113
11	3 014	3 010	3 004	3 004	3 006	3 011	3 006	3 003
12	3 064	3 060	3 057	3 058	3 056	3 061	3 056	3 048
13	3 076	3 072	3 071	3 072	3 070	3 069	3 067	3 059
14	3 014	3 014	3 014	3 013	3 013	3 016	3 005	3 002
15	3 057	3 053	3 052	3 052	3 051	3 051	3 047	3 044
16	3 032	3 025	3 024	3 025	3 023	3 024	3 023	3 020
17	3 087	3 085	3 084	3 086	3 084	3 083	3 083	3 075
18	3 022	3 021	3 016	3 016	3 013	3 018	3 016	3 011
19	3 074	3 072	3 070	3 071	3 073	3 071	3 067	3 065
20	3 067	3 066	3 064	3 059	3 065	3 067	3 065	3 060
Mean	3 049	3 047	3 044	3 044	3 043	3 044	3 042	3 038
Median	3 052	3 049	3 047	3 046	3 045	3 047	3 043	3 040
std.dev	35	35	36	36	36	35	35	35
Max	3 125	3 119	3 119	3 118	3 117	3 119	3 115	3 113
Min	2 988	2 988	2 982	2 985	2 983	2 986	2 982	2 975

This report may not be reproduced except in full
without permission of Samsung Electronics

SAMSUNG ELECTRONICS LED BUSINESS
1, Samsung-ro, Giheung-gu, Yongin-si,
Gyeonggi-do 17113, Korea

9.3 Test condition 3 **105 ℃**

Drive Current **1 620 mA**

Measurement Current **1 620 mA**

No.	CCT (K)								
	7 000 h	8 000 h	9 000 h	10 000 h	11 000 h	12 000 h	13 000 h	14 000 h	15 000 h
1	3 058	3 056	3 056	3 057					
2	2 975	2 975	2 975	2 977					
3	3 038	3 030	3 034	3 034					
4	3 034	3 036	3 032	3 031					
5	2 990	2 986	2 984	2 977					
6	3 056	3 056	3 057	3 055					
7	3 021	3 020	3 018	3 021					
8	3 072	3 069	3 071	3 069					
9	2 987	2 987	2 988	2 992					
10	3 111	3 109	3 104	3 105					
11	3 001	2 995	2 996	3 001					
12	3 046	3 044	3 046	3 046					
13	3 057	3 058	3 061	3 058					
14	3 003	3 004	3 007	3 008					
15	3 039	3 037	3 031	3 024					
16	3 017	3 014	3 013	3 017					
17	3 074	3 077	3 077	3 077					
18	3 006	3 003	3 001	3 003					
19	3 054	3 056	3 059	3 057					
20	3 059	3 055	3 055	3 052					
Mean	3 035	3 033	3 033	3 033					
Median	3 038	3 036	3 033	3 032					
std.dev	34	35	35	34					
Max	3 111	3 109	3 104	3 105					
Min	2 975	2 975	2 975	2 977					

This report may not be reproduced except in full
without permission of Samsung Electronics

SAMSUNG ELECTRONICS LED BUSINESS
1, Samsung-ro, Giheung-gu, Yongin-si,
Gyeonggi-do 17113, Korea

9.4 Chart

<Lumen Maintenance>

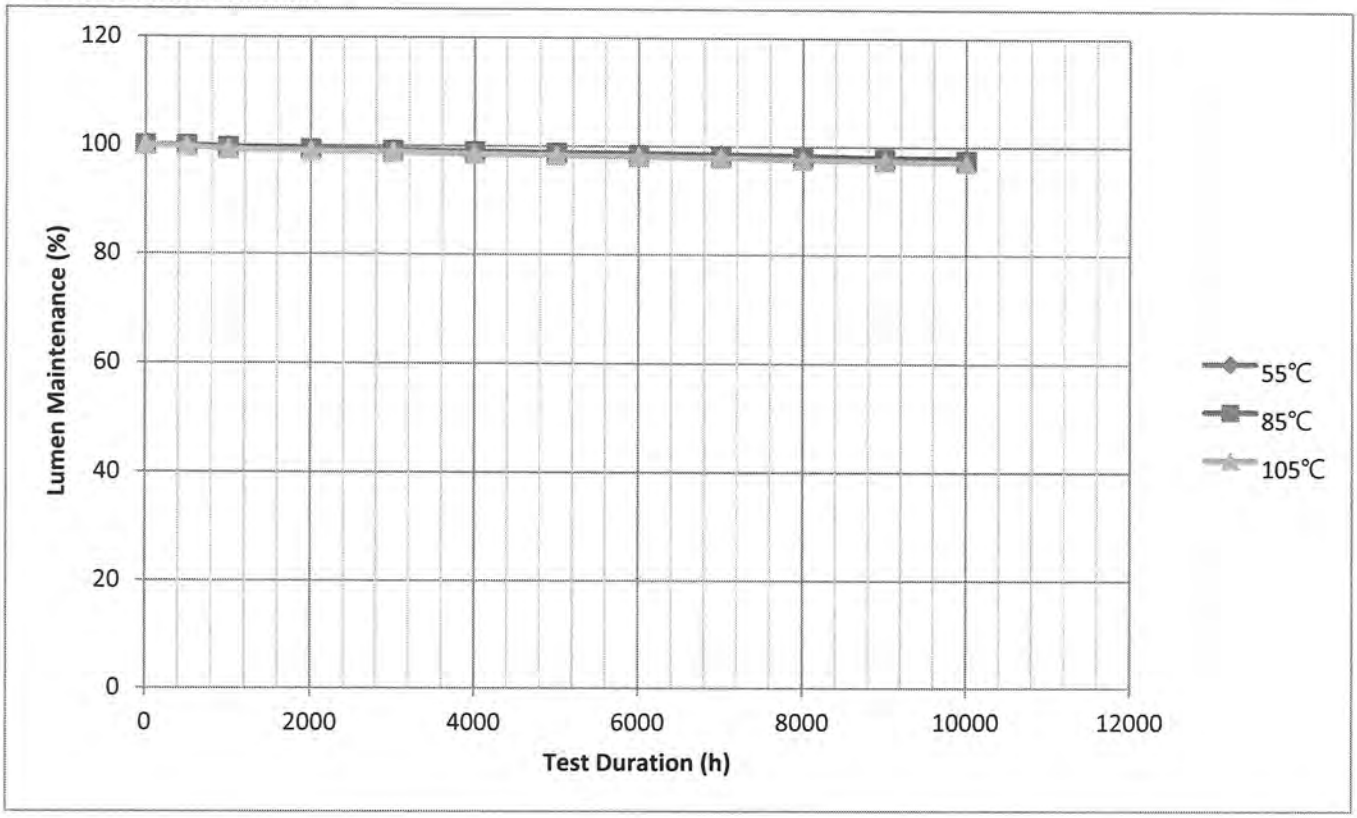

<Chromaticity Shift>

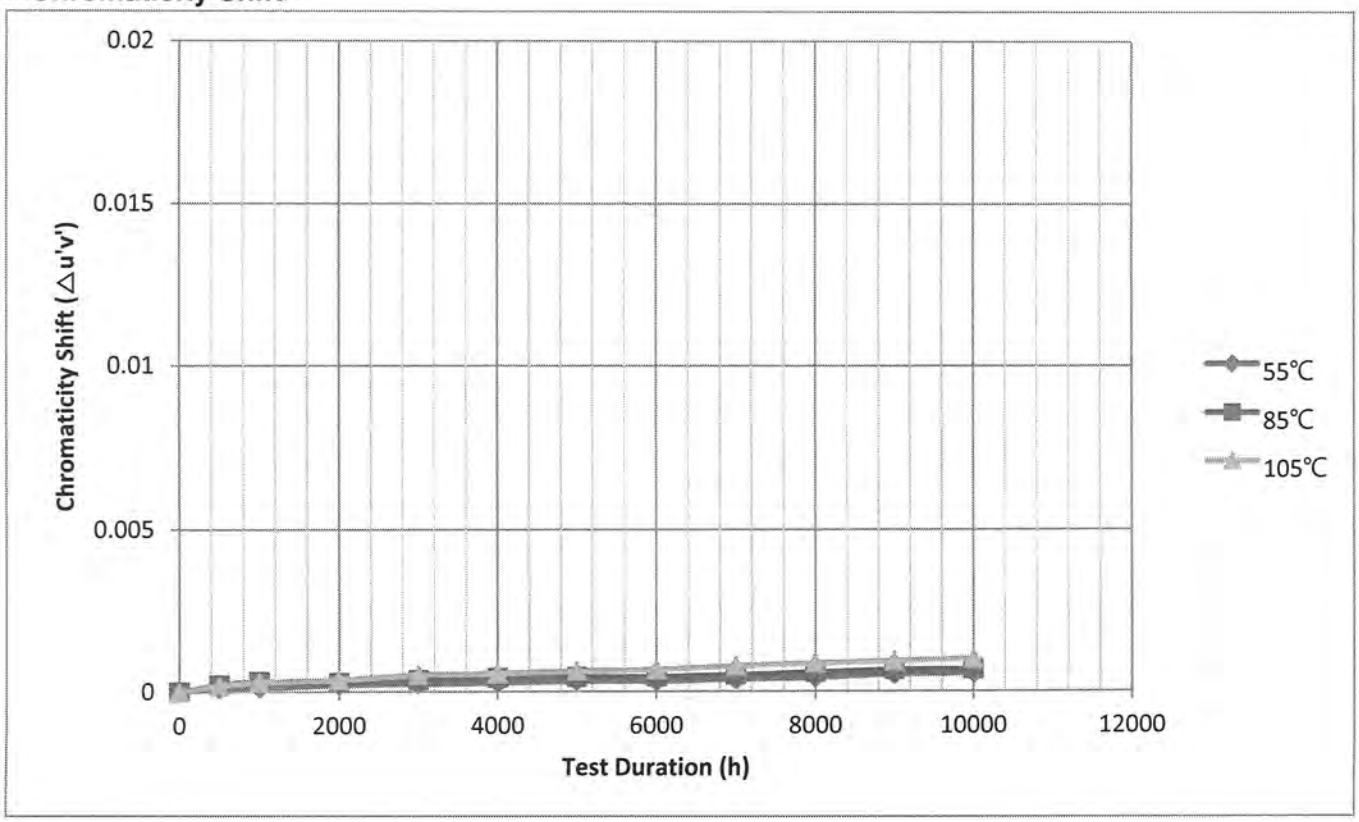

This report may not be reproduced except in full
without permission of Samsung Electronics
F-P06-03(2020.07.27)

SAMSUNG ELECTRONICS LED BUSINESS
1, Samsung-ro, Giheung-gu, Yongin-si,
Gyeonggi-do 17113, Korea

<CCT>

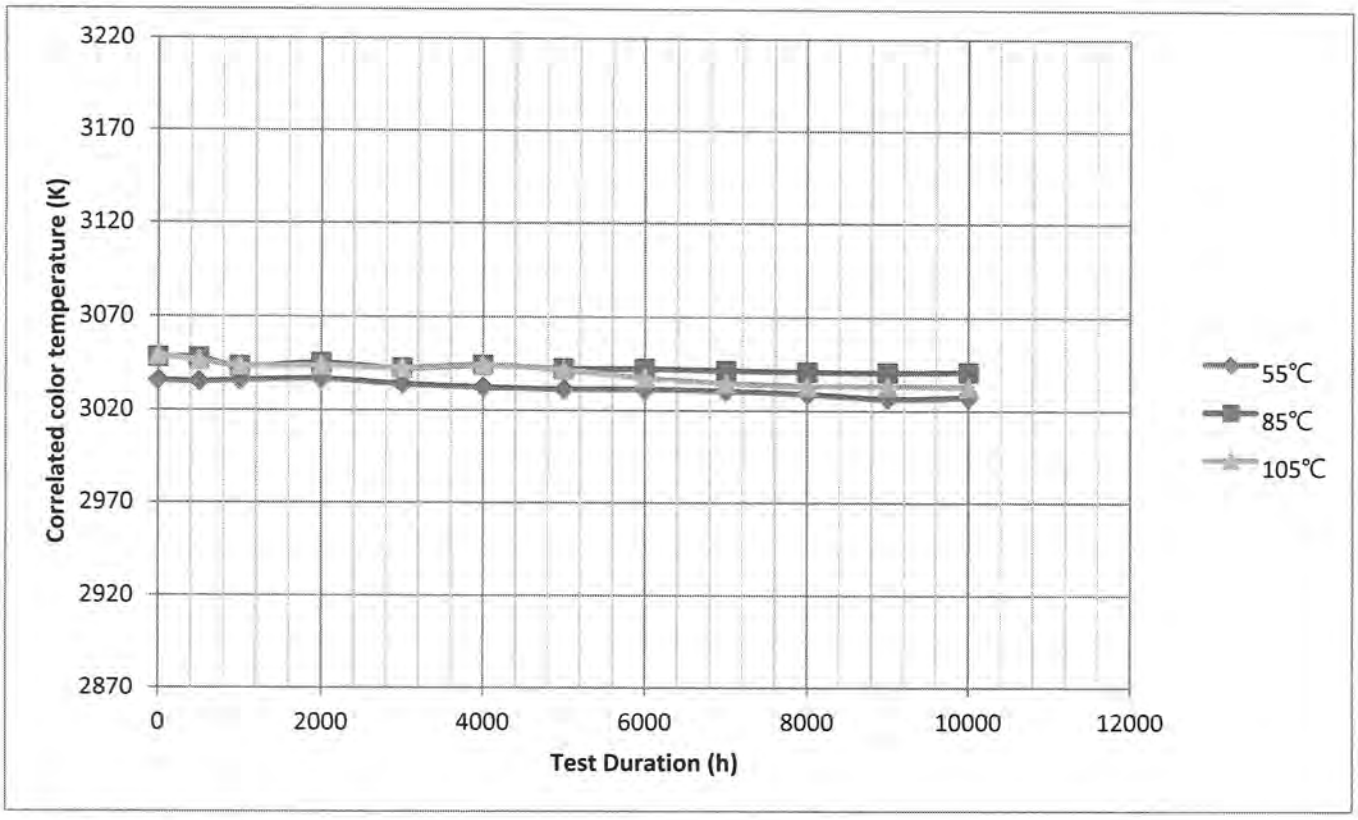

10. Observation of failures

No optical, Electrical or mechanical failure of any LED Package was seen during the lifetime testing.

11. LED light source monitoring interval

0 500 1 000 2 000 3 000 4 000 5 000 6 000 7 000 8 000 9 000 10 000

12. Photometric measurement uncertainty

3.5%

13. TM-21-11 Report : Projecting Long Term Lumen Maintenance of LED Light Source

Table 1: Report at each LM-80 Test Condition					
Description of LED Light Source Tested (manufacturer, model, catalog number)					
Test Condition 1 - 55°C Case Temp		**Test Condition 2 - 85°C Case Temp**		**Test Condition 3 - 105°C Case Temp**	
Sample size	20	Sample size	20	Sample size	20
Number of failures	0	Number of failures	0	Number of failures	0
DUT drive current used in the test (mA)	1 620	DUT drive current used in the test (mA)	1 620	DUT drive current used in the test (mA)	1 620
Test duration (hours)	10,000	Test duration (hours)	10,000	Test duration (hours)	10,000
Test duration used for projection (hour to hour)	5,000 - 10,000	Test duration used for projection (hour to hour)	5,000 - 10,000	Test duration used for projection (hour to hour)	5,000 - 10,000
Tested case temperature (°C)	55	Tested case temperature (°C)	85	Tested case temperature (°C)	105
α	1.975E-06	α	2.330E-06	α	2.456E-06
B	0.998	B	0.998	B	0.995
Reported L90(10k) (hours)	52,000	Reported L90(10k) (hours)	44,000	Reported L90(10k) (hours)	41,000

This report may not be reproduced except in full
without permission of Samsung Electronics

SAMSUNG ELECTRONICS LED BUSINESS
1, Samsung-ro, Giheung-gu, Yongin-si,
Gyeonggi-do 17113, Korea

14. Dimension of samples

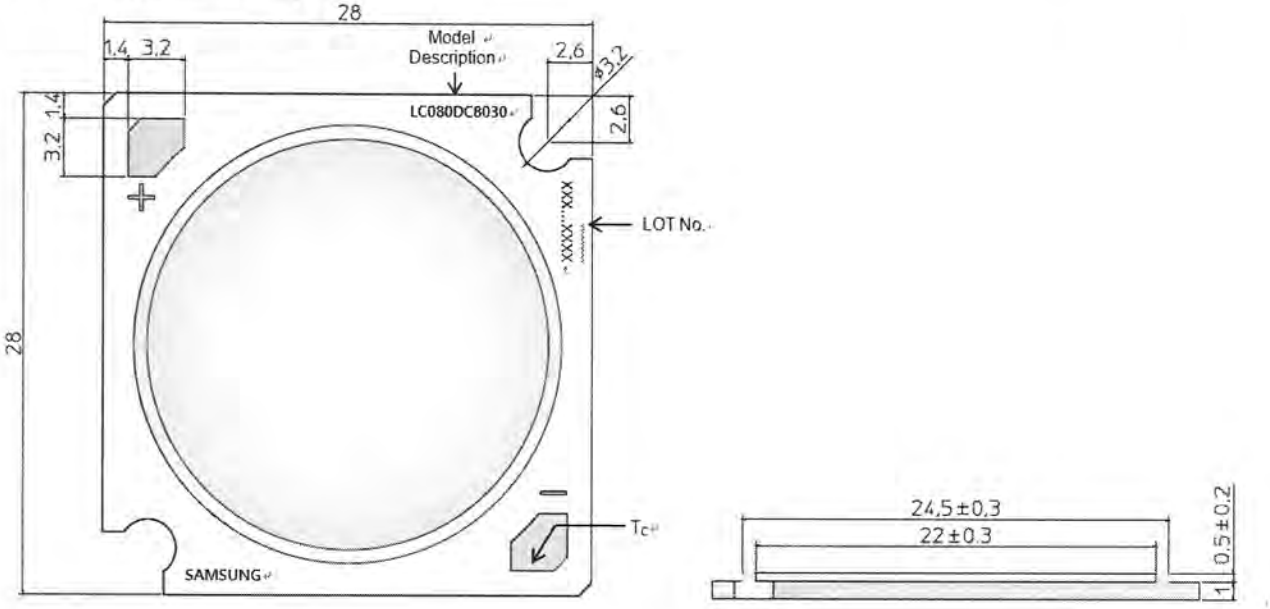

15. Cover models

Product name	Size	Chip		LM80 Condition		
	Outer [mm]	Array	Distance (Chip to Chip) [mm]	If [mA]	Power Density [W/mm^2]	Current density [mA/mm2]
LC003DC	13.5 X 13.5	12s X 1p	1.00	90	**0.018**	**181.2**
LC006DC		12s X 2p	0.75	180	**0.036**	**181.2**
LC009DC		12s X 3p	0.50	270	**0.054**	**181.2**
LC013DC		12s X 4p	0.35	360	**0.072**	**181.2**
LC016DC	19 X 19	12s X 5p	0.59	450	**0.044**	**181.2**
LC019DC		12s X 6p	0.37	540	**0.053**	**181.2**
LC026DC		12s X 8p	0.44	720	**0.070**	**181.2**
LC033DC		12s X 10p	0.33	900	**0.088**	**181.2**
LC040DC	28 X 28	12s X 12p	0.68	1080	**0.048**	**181.2**
LC060DC		18s X 12p	0.50	1080	**0.073**	**181.2**
LC080DC		18s X 18p	0.30	1620	**0.109**	**181.2**

**********END OF TEST REPORT**********